INSTALLATION MANUAL · PROJECTOR CEILING MOUNT

Low-profile universal projector ceiling mount for most projectors.

PRB-717-WHT

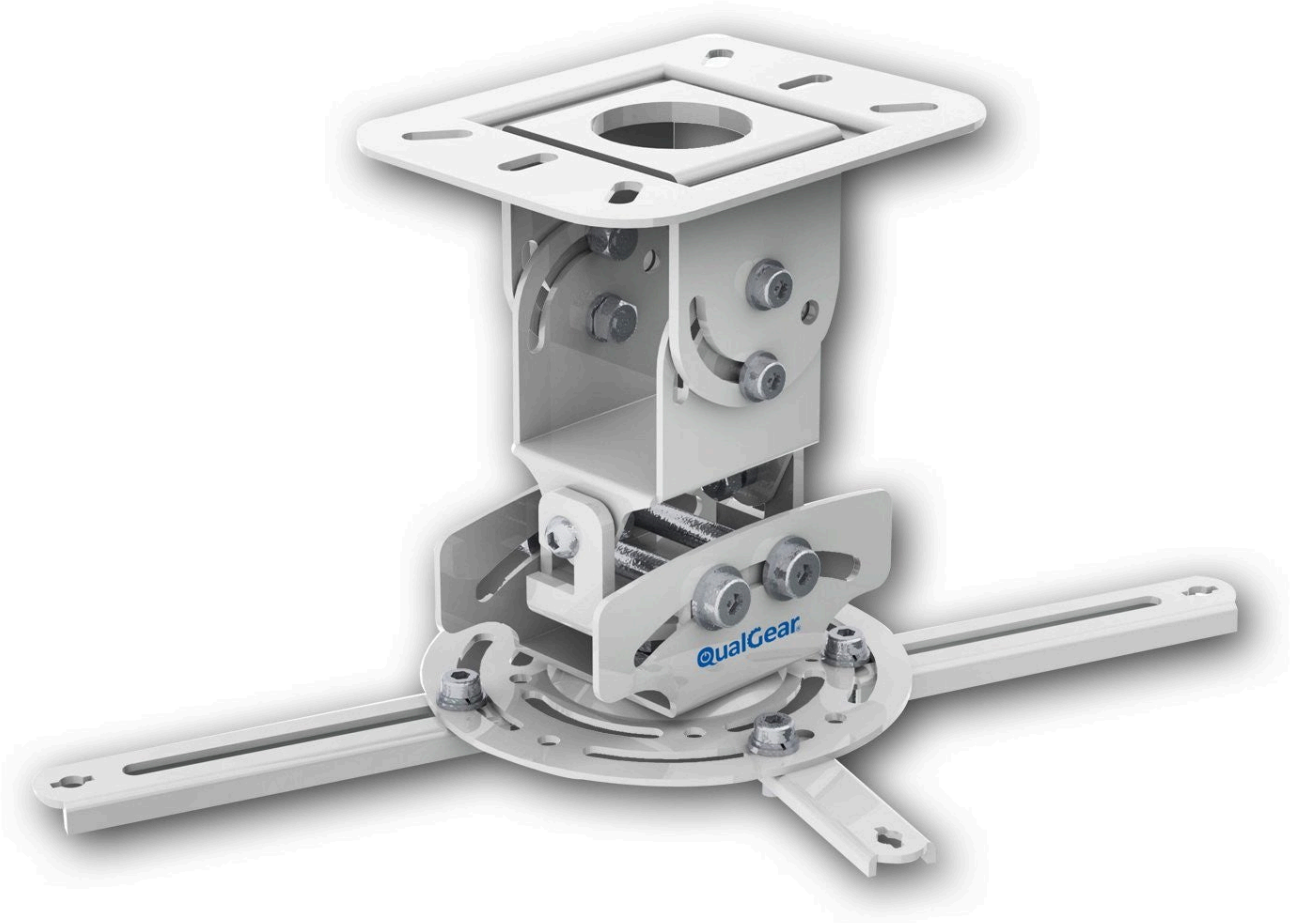

Pitch ±30° · tilt 0–60° · roll ±20° · rotation 360° · shift 1 in

WHITE

MAXIMUM RATED LOAD

30 lb / 13.6 kg

⚠ **Caution.** Do not exceed the maximum rated load. Overloading can cause serious injury or property damage.

© 2026 QUALGEAR LLC · ANNA, TX

Before you begin

Note. Read this entire manual before you start installation and assembly.

⚠ Warning

- Do not begin to install your QualGear product until you have read and understood all instructions and warnings in this manual. U.S. customers with questions can email QualGear customer support at support@qualgear.com. International customers should contact their local distributor.
- This product should be installed only by someone with good mechanical aptitude and basic building construction experience who fully understands these instructions.
- This product is designed to be installed and used only as described in this manual. Improper installation can cause damage or serious injury. QualGear is not liable for improper use or installation of its products.
- Make sure the supporting surface will safely support the combined load of the equipment and all attached hardware and components.
- Always use an assistant or mechanical lifting equipment to lift and position the equipment safely.
- Tighten screws firmly, but do not overtighten. Overtightening can damage the parts and greatly reduce their holding power.
- All QualGear products are for indoor use only. Outdoor use voids the limited warranty.
- All QualGear products are designed and tested for residential use only. Commercial use voids the limited warranty. For warranty information, visit qualgear.com/pages/warranty.
- When mounting to wood studs, make sure the mounting screws are anchored into the center of the studs. An edge-to-edge stud finder is highly recommended.
- Never exceed the maximum rated load specified in this manual: 30 lb / 13.6 kg.
- Use all bolts and screws at the designated points shown in these instructions to prevent property damage and personal injury.
- Do not install near air-conditioner vents or where there is excessive dust or smoke.
- When drilling holes in the ceiling, take care to avoid electrical cables and water or gas pipes in the ceiling.

Approved ceiling construction

CONSTRUCTION	HARDWARE REQUIRED
Wood stud	Included
Wood beam	Included
Solid concrete	Included
Other	Contact a qualified professional

Parts checklist

⚠ **Important.** Before you start, check that every part shown below is included. If any part is missing or damaged, contact your local distributor or support@qualgear.com for replacement parts. Do not start assembly and installation until you have all the parts.

Main parts

ILLUSTRATIONS NOT TO SCALE

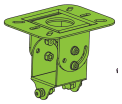

Ceiling mount

MAIN · ×1

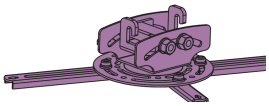

Projector bracket

MAIN · ×1

Wall marking template

MAIN · ×1

Hardware package

PROJECTOR SCREWS: USE ONLY WHAT FITS

2.6 in (66 mm) short extension bracket

A · ×1

2.6 in (66 mm) short extension bracket

B · ×1

4.64 in (118 mm) long extension bracket

C · ×1

4.64 in (118 mm) long extension bracket

D · ×1

5 mm Allen key

E · ×1

M6 wrench

F · ×1

Ø8 × 50 mm concrete anchors

G · ×4

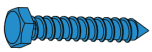

1/4 × 2.5 in mounting screws

H · ×4

M6 × 12 mm screws

I · ×4

M2.5 × 15 mm screws + Ø6.5 × 3.3 × 1 washers

J · ×4

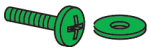

M3 × 20 mm screws + Ø6.5 × 3.3 × 1 washers

K · ×4

M4 × 25 mm screws

L · ×4

M5 × 25 mm screws

M · ×4

M6 × 25 mm screws

N · ×4

Ø12 × 6.7 × 1 washers

O · ×4

M6 square washers

P · ×4

Spacers

Q · ×4

Spacers

R · ×4

5.4 mm spacers

S · ×4

3.4 mm spacers

T · ×4

2.4 mm spacers

U · ×4

M6 spring washers

V · ×4

TOOLS NEEDED

Edge-to-edge stud finder · 5/32 in (4 mm) bit for wood · 5/16 in (8 mm) bit for concrete · socket wrench · hammer · marking pen · electric drill · Phillips screwdriver · measuring tape · level

STEP 1 · MOUNT THE CEILING MOUNT

Install on a wood joist ceiling

1A

Note. For concrete surfaces, skip to step 1B on page 06. Two people are needed.

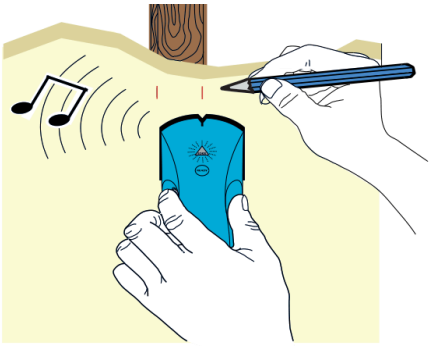

1A.1 Using an edge-to-edge stud finder, find the edges of the stud in the ceiling.

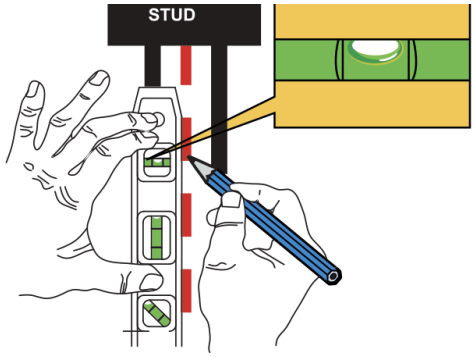

1A.2 Using a level, mark the centerline of the stud.

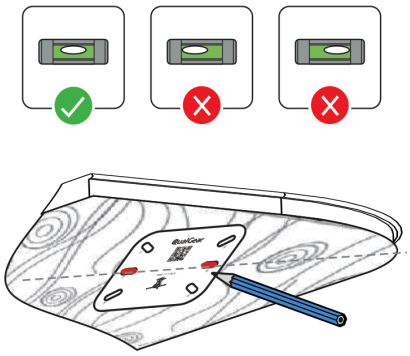

1A.3 Using the marking template, mark holes for drilling on the centerline of the stud.

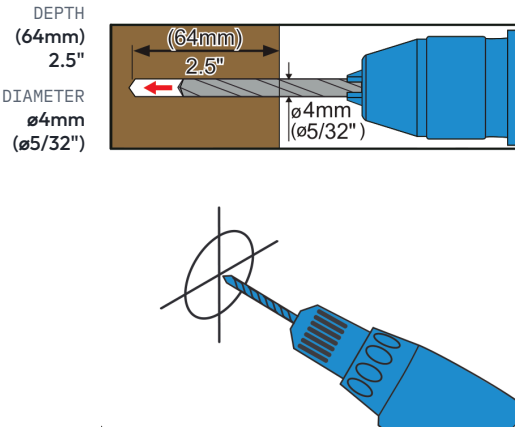

1A.4 Using an electric drill and a 5/32 in (4 mm) drill bit, drill pilot holes to a minimum depth of 2.5 in (64 mm).

Tip. Depending on the direction of the studs, choose the mounting holes accordingly.

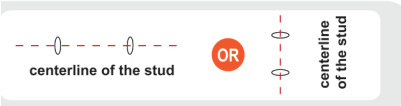

1A Install on a wood joist ceiling (continued)

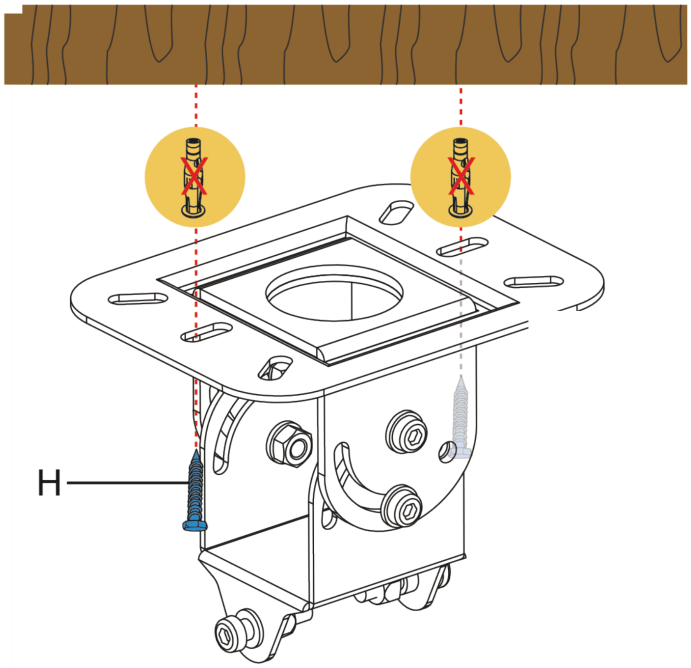

1A.5 Attach the ceiling mount with two screws (H) as shown. Using a socket wrench, tighten each screw until the ceiling mount is firmly attached. Do not use the concrete anchors (G) in wood.

⚠ **Important.** Do not use an electric or power drill to drive the screws, and do not overtighten them.

⚠ Warning

- Installers must verify that the supporting surface will safely support the combined weight of the equipment and all attached hardware and components.
- Make sure the mounting screws are anchored into the center of the stud. An edge-to-edge stud finder is highly recommended.
- The hardware provided is for attaching the mount through standard-thickness drywall into wood studs, or to a solid concrete surface. Installers are responsible for providing hardware for other types of mounting situations.
- Tighten the screws so the ceiling mount is firmly attached, but do not overtighten. Overtightening can damage the screws and greatly reduce their holding power.

CEILING MOUNT INSTALLED · NEXT: STEP 2, PAGE 08

STEP 1 · MOUNT THE CEILING MOUNT

Install on a concrete ceiling

1B

Note. For wood surfaces, see step 1A. Two people are needed.

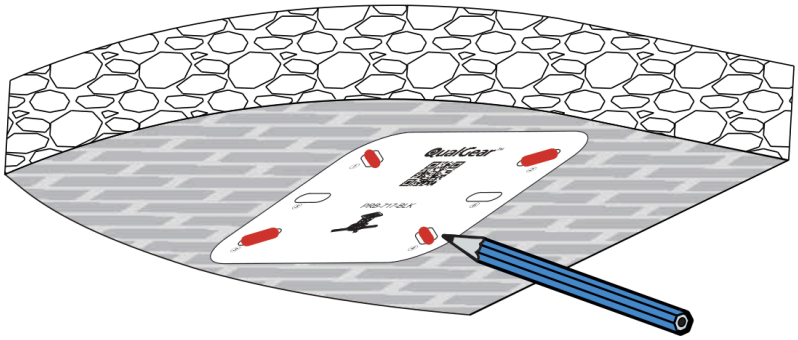

1B.1 Hold the marking template against the ceiling where you want to install the projector, and mark four holes for drilling with a marking pen or pencil.

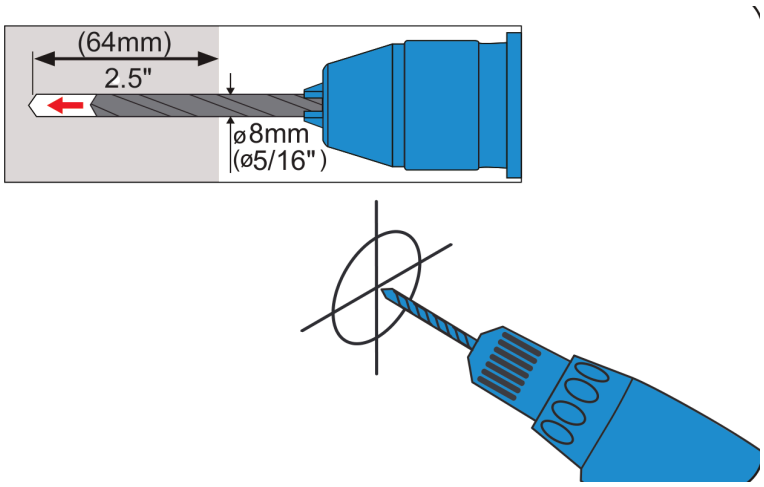

1B.2 Using an electric drill and a 5/16 in (8 mm) drill bit, drill the four mounting holes to a minimum depth of 2.5 in (64 mm).

1B Install on a concrete ceiling (continued)

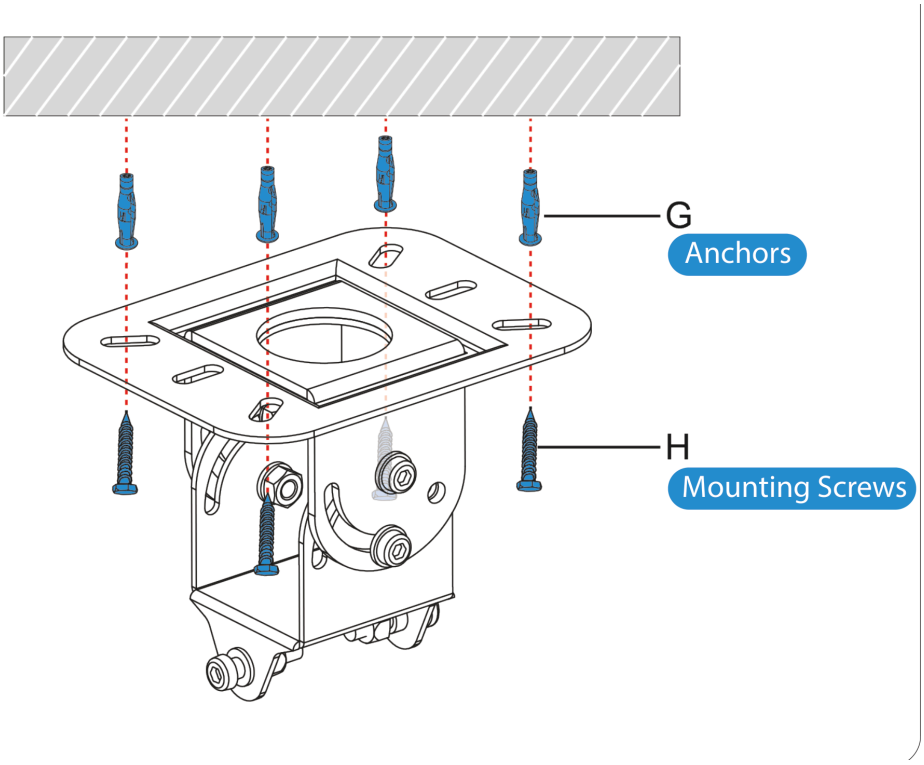

1B.3 Attach the ceiling mount with four concrete anchors (G) and four screws (H). Using a socket wrench, tighten each screw until the ceiling mount is firmly attached.

⚠ **Important.** Do not use an electric or power drill to drive the screws, and do not overtighten them.

⚠ **Warning.** Concrete must have a density of at least 2,000 psi; lighter concrete may not hold the anchors. Make sure the surface will safely support four times the combined load of the equipment and all attached hardware and components.

STEP 2

Attach the projector bracket to the projector

2

⚠ **Warning.** If your projector has only three mounting holes, remove the fourth extension bracket using the Allen key (E). If your projector does not have at least three mounting holes, do not use this mount.

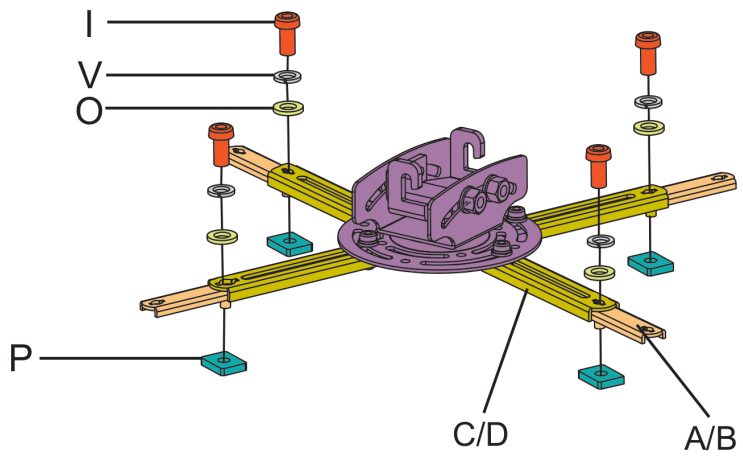

2.1 Loosen the M6 × 12 mm screws (I) with the Allen key (E) until the extension brackets slide freely. To suit your projector's mounting holes, you may replace the attached extension brackets with the additional short (A, B) or long (C, D) brackets, using screws I, spring washers V, washers O, and square washers P as shown.

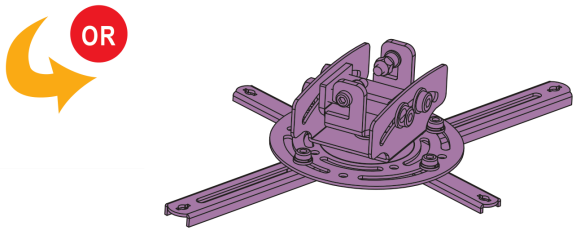

2.2 Or use the projector bracket without additional extension brackets.

2 Attach the projector bracket to the projector (continued)

Tip. Align the shift adjustment opening at the center of the projector bracket parallel with the projector lens opening to allow shift adjustments.

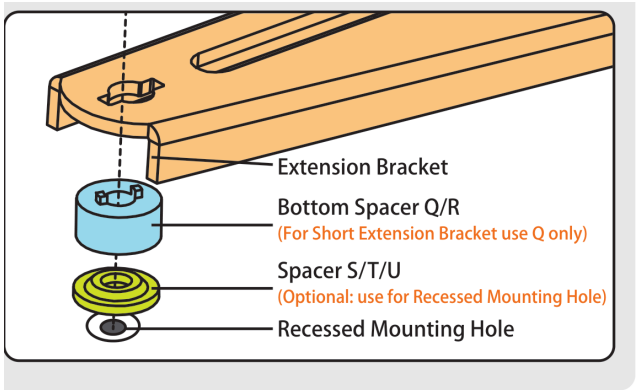

2.3 If the mounting holes are recessed, add spacers S, T, or U as needed.

Place the projector bracket assembly over the projector, aligning the center of the mount with the projector's center of gravity.

Place the bottom spacers (R) between the extension brackets and the projector, aligned with the mounting holes. If you are using a short extension bracket, use spacer Q.

FIGURE 2.3 NOTES

Bottom Spacer Q/R
(For Short Extension Bracket use Q only)
Spacer S/T/U
(Optional: use for Recessed Mounting Hole)

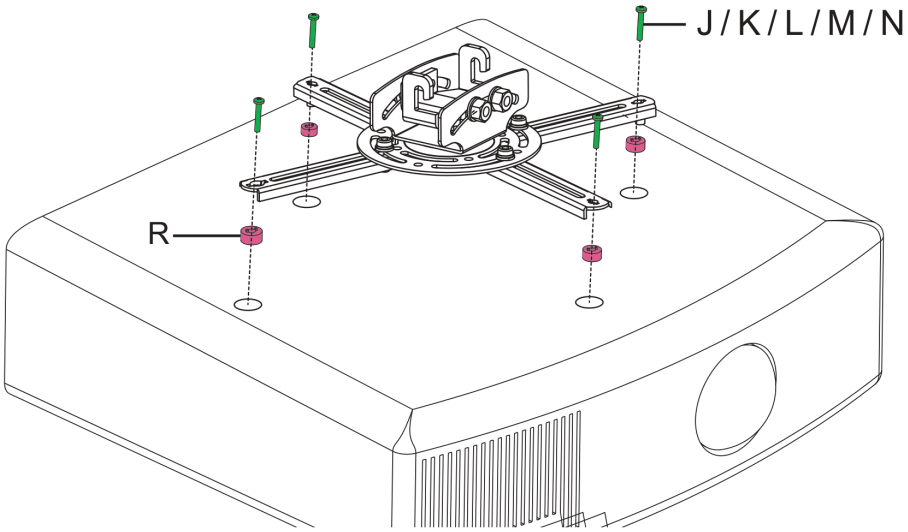

2.4 Select the correct mounting screws (J, K, L, M, or N) and screw the projector bracket assembly firmly onto the projector using a Phillips screwdriver. The assembly is then ready to mount on the ceiling mount.

STEP 3

Attach the projector assembly to the ceiling mount

3

⚠ **Important.** Leave clearance in the M6 × 30 mm screws so they fit properly into the hook, as shown.

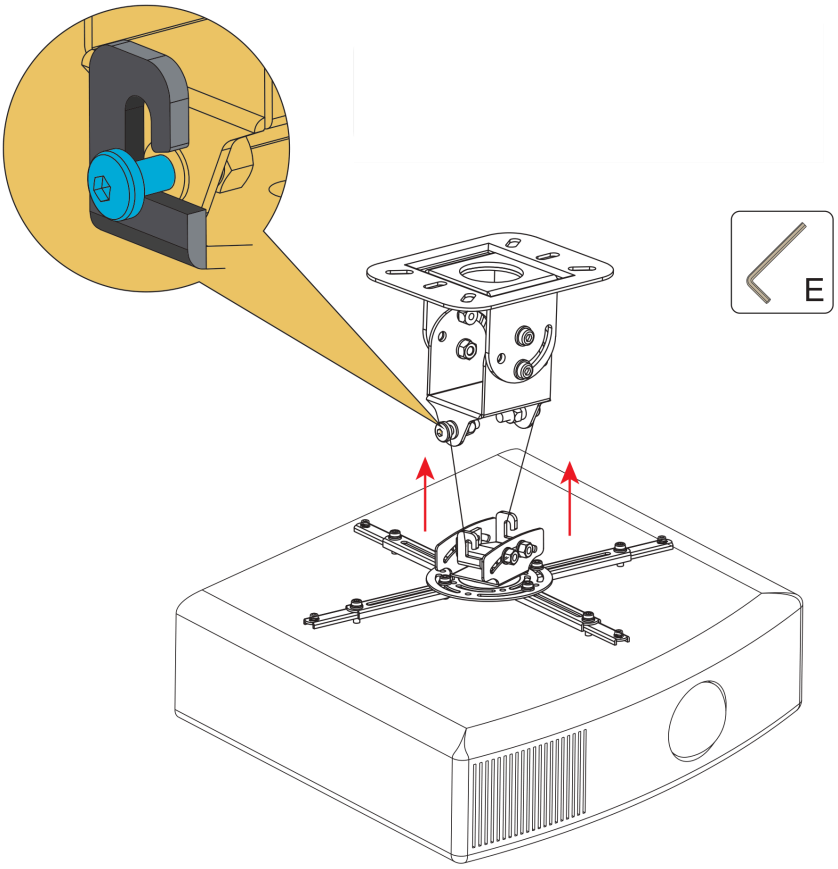

With an assistant supporting the projector's weight, attach the projector assembly to the ceiling mount. Tighten the M6 × 30 mm screws on either side with the Allen key (E).

Tip. When the projector needs servicing, remove it at this easy disconnection point to save time.

STEP 4

Adjust the projector

4

⚠ **Important.** Before each adjustment, make sure the weight of the projector is supported.

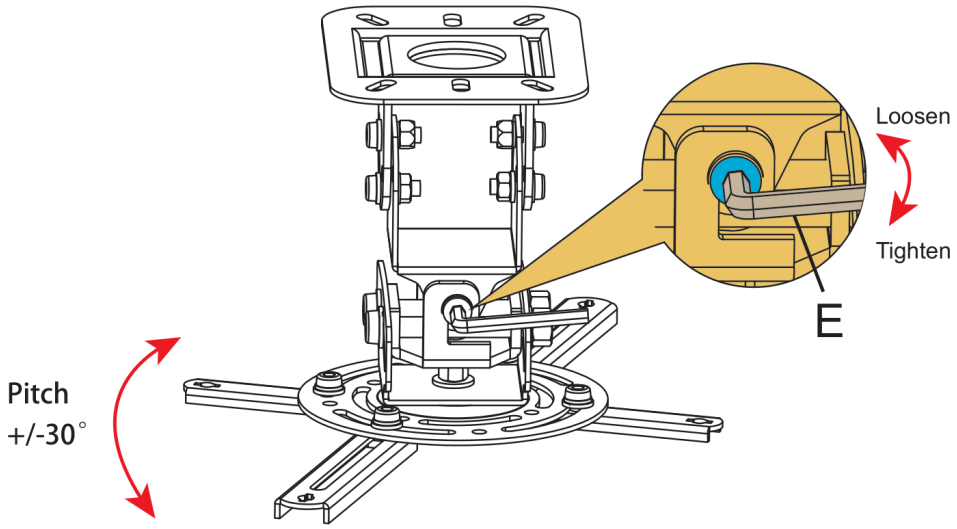

PITCH ±30° Loosen both M6 × 25 mm screws with the Allen key (E), adjust, then retighten both screws firmly.

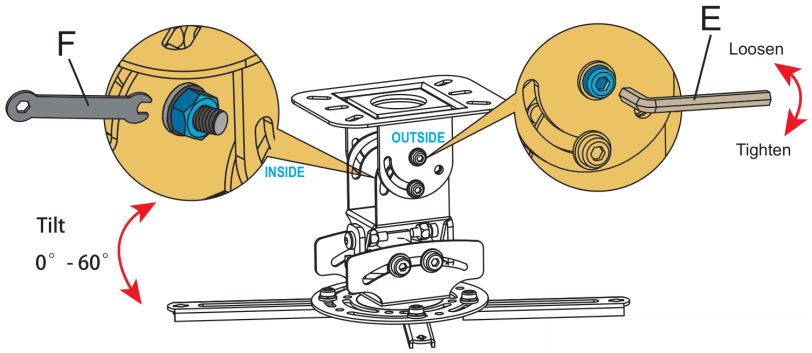

TILT 0–60° Loosen both M6 × 20 mm screws on either side with the Allen key (E) and wrench (F), adjust, then retighten all screws firmly.

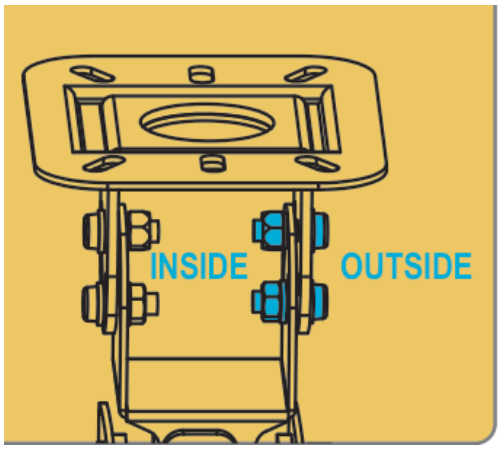

Side view: inside and outside screws.

4 Adjust the projector (continued)

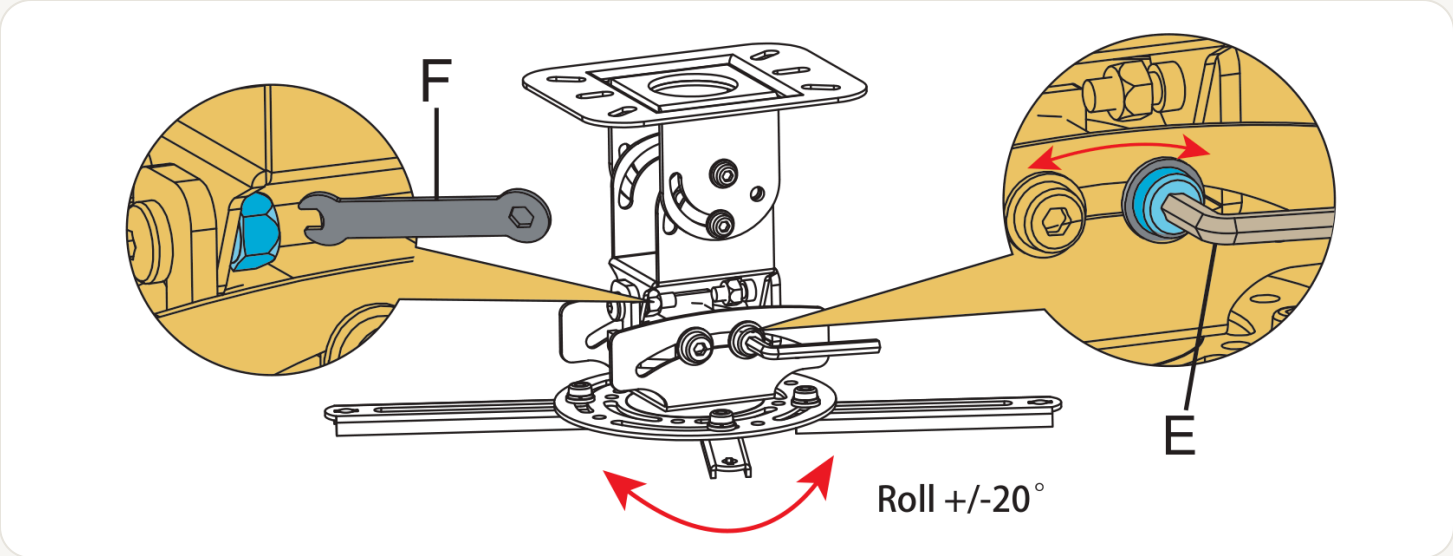

ROLL ±20° Loosen both M6 × 70 mm bolts with the Allen key (E) and wrench (F), adjust, then retighten both screws firmly.

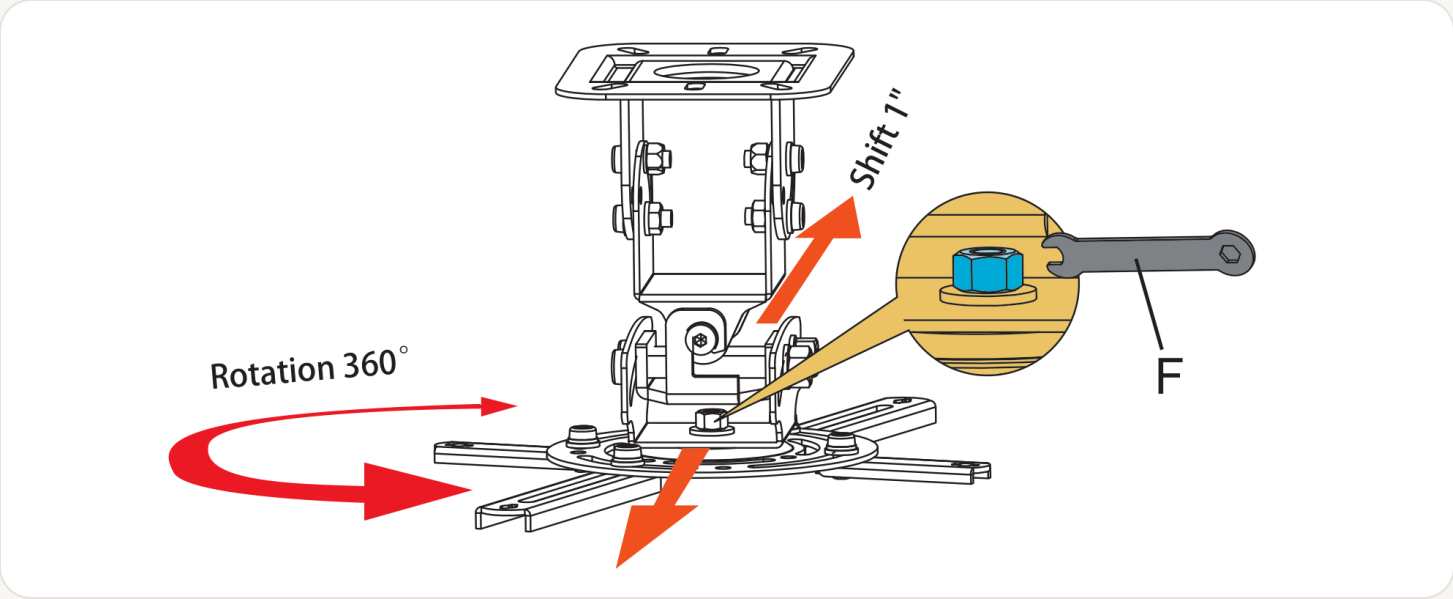

ROTATION 360° · SHIFT 1 IN Loosen the center M6 × 16 mm screw slightly with the wrench (F), adjust, then retighten the screw firmly.

We're here to help. Real people in Anna, Texas.

QUALGEAR CUSTOMER SUPPORT

CALL **+1 (972) 423-5015**
Monday to Friday, 9 a.m. to 5 p.m. Central Time

EMAIL **support@qualgear.com**
Put your model number in the subject line

ONLINE **qualgear.com**
Orders, returns, RMAs, warranty, and product questions

Scan for the Support hub
qualgear.com/pages/support

Before you contact us, have ready

01 Your model number: `PRB-717-WHT`

02 Your order number or dated proof of purchase

03 A short description of the issue, and the step number if it happened during installation

04 Photos of the part or installation, if we ask for them

Warranty claims

This product has a **1-year limited warranty (parts only)** from the original purchase date. Email us with this subject line:

```
Warranty Claim – PRB-717-WHT –
[order number]
```

Do not mail or return anything until we issue an approved RMA or written instructions.

Maintenance

Check at regular intervals that the projector mount is secure and safe to use. If you have questions about any instruction or warning, contact your local distributor or email QualGear technical support at support@qualgear.com.

USEFUL PAGES

Warranty	qualgear.com/pages/warranty
Returns and RMAs	qualgear.com/pages/qualgear-return-policy
FAQ	qualgear.com/pages/faq
Shipping	qualgear.com/pages/shipping

QUALGEAR

PRB-717-WHT · VERSION OCTOBER 2026